MULTI-CHANNEL ACTIVE NOISE CONTROL SYSTEM USING THE PERTURBATION METHOD WITH CORRELATION REMOVAL FILTER

T. Ninagawa, Y. Kajikawa, Y. Nomura

Deptartment of Electronics, Faculty of Engineering, Kansai University,
3-3-35, Yamate-cho, Suita-shi, Osaka 564-8680, Japan
Phone: +81-6-6368-0828, fax: +81-6-6330-3770
email: takaharu@joho.densi.kansai-u.ac.jp
web: http://joho.densi.kansai-u.ac.jp/index-j.html

ABSTRACT

In this paper, we verify practical effectiveness of ANC systems using the perturbation method with a correlation removal filter. Many microphones are generally needed to pick up all noise signals where some noise signals are simultaneously controlled in more spacious space. Therefore, the noise signals give correlations between reference signals and then the convergence speed of noise control filters becomes slow. The proposed system can remove the correlations by inserting a correlation removal filter between reference signals and consequently reduce the noise more quickly. Moreover, we use the frequency domain time difference simultaneous perturbation method (FDTDSP method) to update the noise control filters. Experimental results demonstrate that the ANC system using the perturbation method with a correlation removal filter is effective in the actual system.

1. INTRODUCTION

In active noise control (ANC) systems [1], the filtered-x LMS (FXLMS) algorithm [2] is widely used as an algorithm to update the coefficients of noise control filters. This algorithm has an advantage such as its small computational complexity. In recent years, complicated data processing has been attained by the remarkable features of DSP such as its rapidity and high reliability with the rapid developments in digital signal processing technology. Hence, multi-channel active noise control systems [3][4] of controlling unwanted sound (noise) fields have been widely used. In the Multi-channel active noise control systems, the multiple-error filtered-X LMS (MEFXLMS) algorithm, which is an extension of the FXLMS algorithm, is used. The system with J reference microphones to pick up the noise sources, L secondary sources to generate the anti-noise canceling signals, and M error microphones to measure the residual noise components is defined as CASE(J,L,M). However, the correlations between the J reference signals becomes large and then the convergence speed of noise control filters becomes slow [5] because the J reference microphones pick up all the noise sources. Moreover, the amount of noise reduction becomes small. Furthermore, since estimates of the no less than $L \times M$ secondary path are needed in advance, the system scale becomes very large and the modeling errors may make the system unstable.

In order to solve such problems, we have already proposed a technique called "the perturbation method" [6] which does not need the secondary path models [7] relevant to the latter problem. The perturbation method is an algorithm that calculates an estimate of gradient vector by adding a little perturbation to the coefficients of the noise control filter. This method has an advantage that the computational complexity is small compared with the FXLMS algorithm. Although the convergence speed is quite slow, the frequency domain time difference simultaneous perturbaion (FDTDSP) method [8][9], which is a conbination of the FDSP method [10], the variable perturbation type simultaneous perturbation method [11], and the TDTDSP method [12], has been proposed and then the problem of convergence speed has been rapidly improved.

In this paper, we incorporate a correlation removal filter into the FDTDSP method in order to solve the former problem. The correlation removal filter can remove the correlations between reference signals and consequently improve the convergence speed. In this paper, the effectiveness of the proposed system is demonstrated through experimental results.

2. FDTDSP METHOD

The ANC system using the FDTDSP method [8][9] is shown in Fig. 1. In the perturbation method, the coefficients of the perturbation filter S_{ij} are always added to the coefficients of the noise control filter and the perturbation method updates the coefficients of the noise control filter once every N samples. The updating algorithm at CASE(J,L,M) is defined as follows:

$$
\begin{aligned}
&\mathbf{w}_{lj,n+1} = \mathbf{w}_{lj,n} - \mu \Delta \mathbf{w}_{lj,n} \qquad (1)\\
&\Delta \mathbf{w}_{lj,n} = \text{first } N \text{ elements of IFFT}[\mathbf{U}_{lj,n}]\\
&\mathbf{U}_{lj,n} = \text{diag}[\mathbf{S}_{lj,n}] \cdot \\
&\quad \sum_{m=1}^{M} \frac{\text{diag}[\mathbf{E}^*_{m,n}]\mathbf{E}_{m,n} - \text{diag}[\mathbf{E}^*_{m,n-1}]\mathbf{E}_{m,n-1}}{c_n}\\
&\mathbf{E}_{m,n} = \text{FFT}[0 \cdots 0 \; e_{m,nN+1} \cdots e_{m,k} \cdots e_{m,(n+1)N}]^T\\
&\mathbf{w}_{lj,n} = [w_{lj,n}(1) \; w_{lj,n}(2) \cdots w_{lj,n}(i) \cdots w_{lj,n}(N)]^T\\
&\mathbf{S}_{lj,n} = [S_{lj,n}(1) \; S_{lj,n}(2) \cdots S_{lj,n}(i) \cdots S_{lj,n}(2N)]^T
\end{aligned}
$$

where $\mathbf{w}_{lj,n}$ is the coefficient vector of the noise control filter, $\mathbf{S}_{lj,n}$ is a complex vector whose elements are -1 or 1 in both real and imaginary parts, n the block time, μ the step-size parameter, and c_n the magnitude of the perturbation. Moreover,

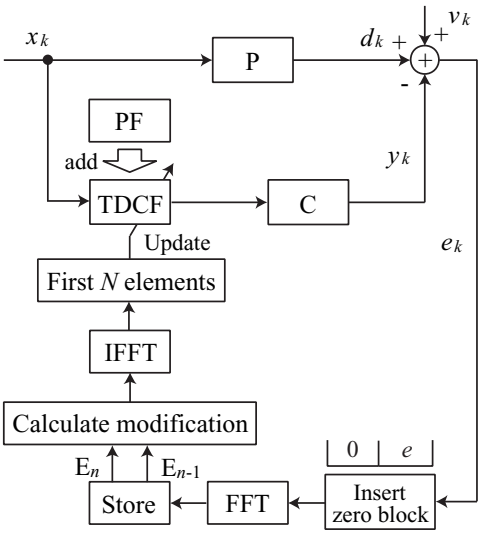

Figure 1: Block diagram of the ANC system using the frequency domain time difference simultaneous perturbation method.

c_n and $\mathbf{s}_{lj,n}$ are respectively defined as follows:

$$c_n = \sqrt{\frac{\alpha J \sum_{m=1}^{M} \sum_{k=(n-1)N+1}^{nN} e_{m,k}^2}{G^2 M \sum_{j=1}^{J} \sum_{k=(n-1)N+1}^{nN} x_{j,k}^2}} \tag{2}$$

$$\mathbf{s}_{lj,n} = \text{first } N \text{ elements of IFFT}[\mathbf{S}_{lj,n}] \tag{3}$$

where G is the mean gain of all secondary paths and α is a coefficient that defines a ratio of the power of the perturbation to the error signal.

3. CORRELATION BETWEEN REFERENCE SIGNALS

3.1 Influence of Transfer Function Matrix B

We consider a system as shown in Fig. 2. In order to evaluate only the characteristic of transfer function matrix $\mathbf{B}$, noise sources are assumed to be independent of each other. At this time, coherence function $\gamma_{x_1x_2}^2(l)$ is defined as follows:

$$\gamma_{x_1x_2}^2(l) = \frac{|B_{11}^*(l)B_{21}(l) + B_{12}^*(l)B_{22}(l)|^2}{(|B_{11}(l)|^2 + |B_{12}(l)|^2)(|B_{21}(l)|^2 + |B_{22}(l)|^2)} \tag{4}$$

where $0 \le \gamma_{x_1x_2}^2 \le 1$. The near one coherence function value shows a strong correlation between the reference signals x_1 and x_2. On the other hand, the near zero coherence function value shows a weak correlation (uncorrelation). If the value is near one at a certain frequency bin, the filter coefficient at the same frequency bin would converge slowly. The relation

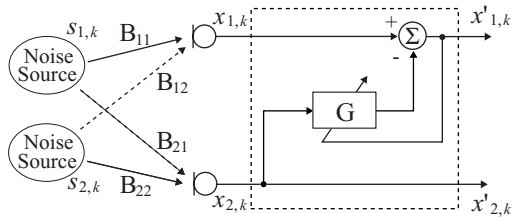

Figure 2: Block diagram of the decorrelator G.

between the determinant of matrix $\mathbf{BB}^H$ and the coherence function $\gamma_{x_1x_2}^2$ is defined as follows:

$$|\mathbf{BB}^H| = (|B_{11}|^2 + |B_{12}|^2)(|B_{21}|^2 + |B_{22}|^2)(1 - \gamma_{x_1x_2}^2) \tag{5}$$

If there is a strong correlation between x_1 and x_2, the determinant of matrix $\mathbf{BB}^H$ would become small because the determinant of $\mathbf{BB}^H$ is equal to the product of the eigen values of $\mathbf{BB}^H$. In this case, since the spectra matrix of the transfer function from noise source to reference microphone is also small, the convergence speed of noise control filters becomes slow [5].

3.2 Correlation Removal Filter

The problem discussed in the preceding section could be improved by inserting the correlation removal filter between the reference signals as shown in Fig. 2. The optimal solution G_{opt} of the correlation removal filter in a certain frequency l is defined as follows:

$$\begin{aligned} G_{\text{opt}} &= R^{-1}P = \frac{E[X_1X_2^*]}{E[X_2X_2^*]} \\ &= \frac{B_{11}B_{21}^*|S_1|^2 + B_{12}B_{22}^*|S_2|^2}{|B_{21}|^2|S_1|^2 + |B_{22}|^2|S_2|^2} \end{aligned} \tag{6}$$

At this time, the relation between an input and an output is as follows:

$$\begin{aligned} \begin{bmatrix} X_1' \\ X_2' \end{bmatrix} &= \begin{bmatrix} 1 & -G_{\text{opt}} \\ 0 & 1 \end{bmatrix} \begin{bmatrix} X_1 \\ X_2 \end{bmatrix} \\ &= \mathbf{G} \begin{bmatrix} X_1 \\ X_2 \end{bmatrix} \end{aligned} \tag{7}$$

where X_1, X_2, X_1', X_2' , S_1, and S_2 are spectra of x_1, x_2, x_1', x_2', s_1, and s_2, respectively. $R = E[X_2X_2^*]$ is power spectrum of X_2, and $P = E[X_1X_2^*]$ is cross spectrum between X_1 and X_2. Equation (6) means that the correlation removal filter can turn correlative signals uncorrelated ones.

In this paper, the NLMS algorithm is used as an updating algorithm of the coefficient vector of a correlation removal filter. The updating algorithm is defined as follows:

$$\mathbf{g}_{1,k+1} = \mathbf{g}_{1,k} + \frac{\nu}{\xi + ||\mathbf{x}_{2,k}||^2} x_{1,k}' \mathbf{x}_{2,k} \tag{8}$$

where ν is a step-size parameter and ξ is a positve constant. It has been experimentally clarified that the optimal tap length is equal to the delay of transfer function from noise source to reference microphone.

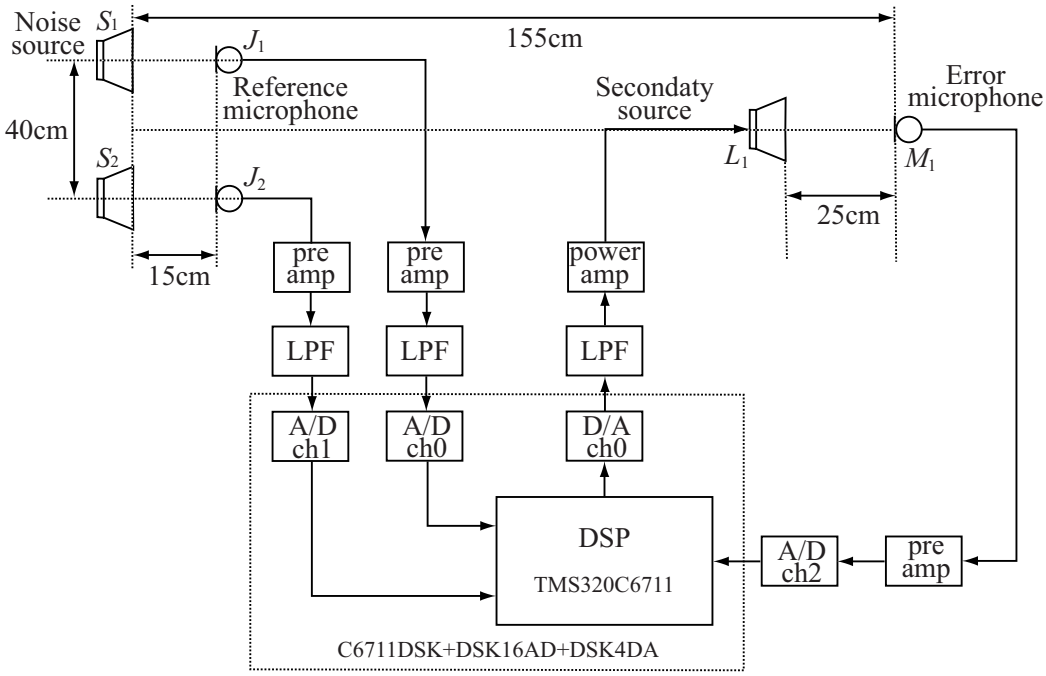

Figure 3: Measurement model of the multiple-channel ANC system.

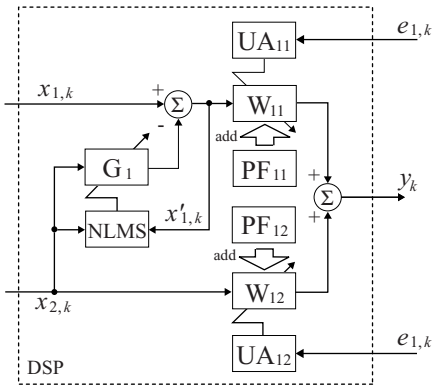

Figure 4: Block diagram of the algorithm implemented in DSP.

4. EXPERIMENTAL RESULTS

4.1 Experiment Conditions

We demonstrate that the ANC system using the multi-channel perturbation method can effectively control noise in the environment with reverberation. Figure 3 shows a multi-channel ANC system at CASE(2,1,1) used in the experiment. DSP used in this experiment is TMS320C6711 (Texas Instruments Co. product). The block diagram actually implemented to DSP is shown in Fig. 4. In Fig. 4, W_{11} and W_{12} are noise control filters, PF_{11} and PF_{12} perturbation filters, and G_1 a correlation removal filter. The updating algorithms of noise control filters and a correlation removal filter are the FDTDSP method and NLMS algorithm, respectively. Table 1 shows experiment conditions.

The experiment procedure is as follows. First, two noise sources are prepared. One is multi-sinusoidal wave (100, 130, 180[Hz]) and the other is multi-sinusoidal wave (240, 320[Hz]). Next, we verify the cancellation performance. The step-size parameters are selected so that the convergence becomes fast and stable. α and G are set to 0.01 and 0.1, respectively.

4.2 Cancellation Performance

Figure 5 shows error signals of the ANC system at the error microphone M_1. In Fig. 5, (a), (b), and (c) are out of operation, without and with the correlation removal filter, respectively. Figure 6 also shows A weighted error spectra from 30 to 40 seconds in Fig. 5.

It can be seen from Fig. 5 that the ANC system with the correlation removal filter can converge faster than the ANC system without the removal correlation filter. This is because the correlation between reference signals is removed quickly. It can be also seen from Fig. 6 that the proposed method is very effective at 240 [Hz] compared with the conventional method. However, the amount of noise reduction is a few dB at 320 [Hz] because $\gamma^2_{x_1x_2}$ is large. Since the number of taps of the correlation removal filter needed in order to remove correlation is very small, there is hardly any burden of the amount of operations concerning DSP.

5. CONCLUSION

In this paper, we have inserted the correlation removal filter between the reference signals of the ANC system using the FDTDSP method, and verified the cancellation effect. As a result, the convergence speed has been improved by removing the correlation between reference signals in advance.

Table 1: Measurement conditions.

Sampling frequency	5000 [Hz]
Tap length of noise control filter	128
Tap length of the G filter	8
Cut-off frequency of low-pass filter	1562.5 [Hz]
Temperature	22 [deg. C]

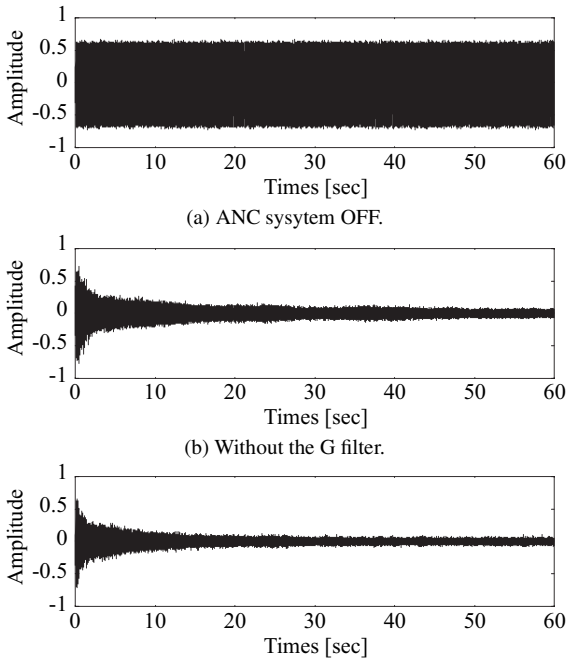

Figure 5: Error signals of the ANC system.

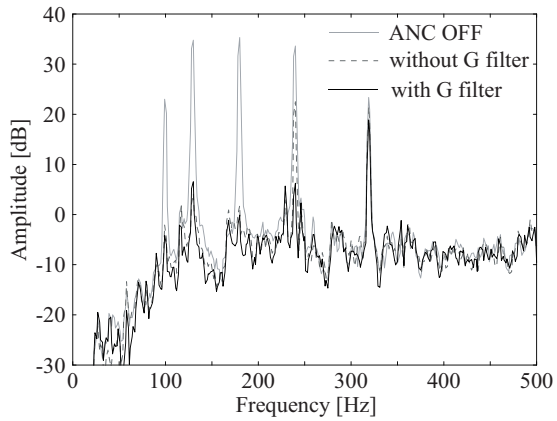

Figure 6: A weighted error spectra of the ANC system from 30 to 40 seconds.

Acknowledgement
This work was supported in part by Grants-in-Aid for Scientific Research No.14750320 from the Ministry of Education, Culture, Sports, Science, and Technology.

REFERENCES

[1] S. M. Kuo and D. R. Morgan, Active Noise Control Systems, John Willy & Sons, New York, 1996.

[2] B. Widrow and S. D. Stearns, Adaptive signal processing, Prentice-Hall, New Jersey, 1985.

[3] S. J. Elliott, I. M. Stothers, and P. A. Nelson, "A Multiple Error LMS Algorithm and Its Application to the Active Control of Sound and Vibration," IEEE Trans. Acoust. Speech Signal Process., vol. 35, no. 10, pp. 1423–1434, Oct. 1987.

[4] G. Chen, M. Abe, and T. Sone, "The Convergence Characteristics of Adaptive Algorithm for ANC System with Multiple Noise Sources and Multiple Control Points," IEICE Trans. on Fundamentals (Japanese Edition), vol. J82-A, no. 6, pp. 851–859, Jun. 1999.

[5] G. Chen, M. Abe, and T. Sone, "Improvement of Convergence Speed in the Filtered-x LMS Algorithm with Correlated Reference Signals," IEICE Trans. on Fundamentals (Japanese Edition), vol. J80-A, no. 2, pp. 309–316, Feb. 1997.

[6] Y. Maeda, H. Hirano, and Y. Kanata, "A learning rule of neural networks via simultaneous perturbation and its hardware implementation," Neural Networks, vol. 8, no. 2, pp. 251–259, Feb. 1995.

[7] Y. Kajikawa and Y. Nomura, "Active noise control without a secondary path model," Proc. of the 2000 IEEE International Symposium on Circuits and System, Geneva, Switzerland, May 2000.

[8] T. Mori, Y. Kajikawa, and Y. Nomura, "Active Noise Control Systems Using the Frequency Domain Time Difference Simultaneous Perturbation Method," 2002 IEEE International Symposium on Intelligent Signal Processing and Communication Systems, Kaohsiung, Taiwan, pp. 197–201, Nov. 2002.

[9] T. Mori, Y. Kajikawa, and Y. Nomura, "Frequency domain active noise control systems using the time difference simultaneous perturbation method," IEICE Trans. on Fundamentals, vol. E86-A, no. 4, pp. 946–949, Apr. 2003.

[10] Y. Kajikawa and Y. Nomura, "Frequency domain active noise control system without a secondary path model via perturbation method," IEICE Trans. on Fundamentals, vol. E84-A, no. 12, pp. 3090–3098, Dec. 2001.

[11] Y. Kajikawa and Y. Nomura, "Active noise control without a secondary path model by using a frequency-domain simultaneous perturbation method with variable perturbation," Proc. of the 2003 IEEE International Conference on Acoustic, Speech, and Signal Processing, Hong Kong, China, Apr. 2003.

[12] Y. Maeda and Y. Kanata, "Learning rules of neural networks using time difference simultaneous perturbation—Learning by only one value of an error function,Trans. Inst. Electro. Eng. Jpn., vol. 119-C, no. 3, pp. 303–309, Mar. 1999.