FIXED-POINT REFINEMENT OF OFDM-BASED ADAPTIVE EQUALIZERS: AN HEURISTIC APPROACH

G. Caffarena, A. Fernández, C. Carreras, O. Nieto-Taladriz

Departamento de Ingeniería Electrónica, Universidad Politécnica de Madrid
C. Universitaria s/n, 28040 Madrid, Spain (Europe)
phone: +34 91 5495700 ext. 544, fax: +34 91 3367323, email: gabriel@die.upm.es

ABSTRACT

In this paper we address the quantization of adaptive equalizers for OFDM-based WLAN. Traditional simulation-based approaches require extremely long times to quantize complex systems. We have tackled this issue threefold: i) generating a minimization wordlength procedure tuned for adaptive equalizers; ii) providing a quantization evaluation criterion that allows fast Monte-Carlo simulations with high relative errors; and iii) simulating only a subset of subcarriers to extract quantization information. One of the main results is that running several single-subcarrier simulations is possible to achieve acceptable results in simulation time and performance degradation compared to the simulation of complete OFDM symbols. We use as a practical example a 220 Mbps OFDM RLS equalizer combined with ABL pre-equalization.

1. INTRODUCTION

OFDM [1] has become a popular choice for WLAN systems because, amongst other features, it provides mitigation of the multipath channel distortion, thanks to the cyclic prefix (CP) which eliminates inter symbol interference (ISI). Adaptive channel equalization is necessary to compensate the frequency selectivity of the channel and to track its changes in time [2]. Figure 1 displays a frequency model of an OFDM modem which assumes perfect sinchronization and no ISI. The bitstream to be transmitted is split into small groups of bits that are assigned to different subcarriers. Upon reception, each subcarrier signal has been degraded by the channel ($H_i(k)$) and by the noise added by the analog front-end, ($N_i(k)$). The equalizer recovers the original information sent. Figure 1 also shows a diagram of an adaptive equalizer. The equalizer compensates the effect of the channel by means of a set of coefficients *w* which are updated using the prediction error and previous coefficients *w*.

Fixed-point refinement, also called quantization, performs the translation of the algorithm specification from floating point (FlP) to fixed-point (FxP), meeting the design constraints in order to achieve low-cost hardware implementations. Traditionally, the quantization of systems like our case study requires a simulation-based approach [3] due to the complexity of the system itself and to the presence of non-linear blocks. The quantization of OFDM systems is a very time-consuming task due to: a) the iterative nature of this process that requires multiple long Monte-Carlo (MC) simulations to asses the effect of finite wordlengths; b) the existence of multiple subcarriers that increases the number of simulation input data; and c) the presence of a time-varying channel which needs a sufficient long number of samples to model realistically a WLAN channel.

We address the long time required for the quantization of OFDM adaptive equalizers threefold: i) selecting a wordlength minimization procedure tuned to the system under study, to reduce the number of quantization iterations; ii) reducing MC simulation time and providing a method to handle the inaccuracy introduced; and iii) simulating only a small number of subcarriers assuming that the channel is similar for all subcarriers. We seek here a practical approach that allows hardware designers to easily quantize such complex systems.

The paper is structured as follows: In the second section a simulation-based quantization approach is presented. Section 3 deals with the model generation where the C++ simulation framework used is presented. Section 4 focuses on MC simulation and presents several proposals to reduce simulation times. Section 5 contains the quantization results of an RLS equalizer for OFDM. Finally, in the last section the conclusions are drawn.

2. SIMULATION-BASED QUANTIZATION

Simulation-based quantization is chosen when it comes to implement non-linear, time-varying systems like our case study [3]. Analytical approaches based on the analysis of the algorithm data-flow graph produce results faster, but they only apply to linear time-invariant systems. There are hybrid approaches that combine the advantages of both techniques [4,5]. However, the proposal in [4] relies strongly on simulations to quantize input and feedback signals. The proposal in [5] minimize the number of simulations required but it does not support decision directed systems, commonly used in wireless communications.

The final goal of quantization is to apply an FxP format to any single variable of the algorithm in a way that the design constraints are met. The FxP format is composed of the following parameters:

S: Sign (0 if unsigned; 1 if signed)
Wi: Integer wordlength
Wf: Fractionary wordlength

The wordlength of an FxP number is

WL = S + Wi + Wf

Prior to quantization, the algorithm is evaluated by running FlP

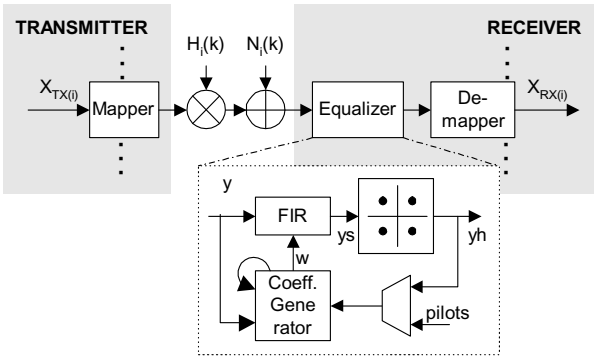

Figure 1.- Basic baseband frequency model of OFDM-based modem. Only one subcarrier is represented.

simulations by assessing the suitability of the algorithm to meet a concrete target symbol error rate (SER_T). The degradation produced by the quantization process is measured in terms of signal-to-noise ratio (SNR) loss

$$\Delta SNR_Q = SNR_Q - SNR_T$$

where, SNR_T and SNR_Q are the SNRs which produce error rates equal to SER_T in the FlP and FxP systems, respectively. ΔSNR_Q must be kept within a range specified by the design constraints (e.g.- 0.1 dB).

2.1 Quantization process

After the FlP evaluation, the first step carried out is to determine the integer wordlengths *Wi*. This is usually done through a simple simulation that collects statistics of all variables. Hence, the *Wi* of variable *V* can be determined by using the expression

$$Wi_V \geq \left\lfloor \log_2 \left(\max \left(|MIN_V|, |MAX_V| \right) \right) \right\rfloor$$

where the interval $[MIN_V, MAX_V]$ comprises the possible values of *V* obtained during the simulation.

The next step is to find *Wf* and this is carried out through a wordlength minimization procedure explained in the next subsection. This procedure states the ordering of variables for FxP format application, and the strategy to follow if the quality measure exceeds a certain threshold. The quality measurement is performed using FxP simulation and in communications systems corresponds to the SNR loss. This process goes on until all variables are quantized. In section 4 we propose an alternative quality measure to the SNR loss that allows a speed up of the quantization process.

2.2 Wordlength minimization procedure

Here we present a wordlength minimization procedure tuned for adaptive equalizers. The main goal is to reduce the total number of iterations of the minimization procedure while achieving reduced wordlengths that comply with the design constraints. Assuming that *Wi* determination has already been performed, the procedure is the following:

1. Estimate *Wf* for the output of operators that require infinite precision (i.e. dividers, square roots, etc).
2. Estimate *Wf* for feedback signals, e.g. the filter coefficients. These signals increase their fractionary part with each iteration and may end up having too long wordlengths.
3. Estimate *Wf* for input signals if their FxP format is not specified in the design specifications.
4. Propagate *Wf* requirements through the algorithm to obtain the FxP format of the remaining signals.

From 1 to 3 the *Wf* values are selected using a quality criterion that is computed through simulation. After step 3 the whole set of variables in the filter is implicitly quantized. The format propagation in 4 is carried out by one final FxP simulation that collects information about the maximum number of fractionary bits necessary for each remaining variable.

3. SYSTEM MODELLING

The model generated during algorithmic evaluation is used during the quantization process, but it is necessary to introduce the effect of finite wordlengths. Matlab is commonly selected to model DSP systems. While it works fine at the algorithmic level, it hides information regarding the internal variables of many of its operations and does not fully support quantization. For this reason, a hardware-wise language is required to implement bit-true operations. Examples are [3] and [4], all of them based on the casting of floating-point (FlP) into fixed-point (FxP) using C or C++. We have developed a C++ framework called Abaco [6] that includes a library of data types and some analysis and presentation tools that enable the mixed simulation of FlP and FxP code to obtain signal statistics and traces. The library supports several overflow modes, including wrap-around and saturation, and several underflow modes, including rounding and truncation.

4. MONTE-CARLO SIMULATIONS

Monte-Carlo (MC) simulations are commonly used to estimate the symbol error rates (SER). Their main drawback is that they require a considerable large number of input vectors to estimate low SERs. In gaussian channels the relationship between number of samples (both data transmitted and noise) and the relative precision *e* is

$$N > \frac{1}{SER \cdot e^2}$$

In OFDM-based systems the number of samples increases n-fold due to the use of multiple subcarriers (e.g. 802.11a uses 54). In addition, a time varying channel requires a number of channel samples big enough to include a representative set. This leads to infeasible simulation time in practice.

MC simulation is extensively used during quantization, so reducing simulation time implies reducing quantization duration. However, such reduction leads to a decrease in SER estimation accuracy and, therefore, there is a risk of a wrong FxP translation. Next, we propose a method to deal with accuracy loss and study the possibility of reducing the number of subcarriers involved in the simulations.

4.1 Dealing with SER estimation variance

We define a *short* simulation as an MC simulation with a high relative error *e*, and therefore with less samples than more accurate simulations. Figure 2.a displays the SER values computed via *short* simulations obtained after applying different wordlengths to a particular variable of an adaptive equalizer (described in section 5).

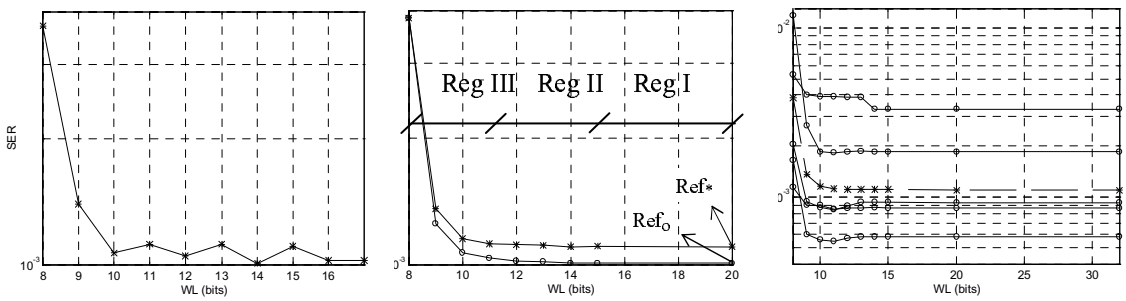

a) b) c)

Figure 2.- a) Wordlength vs SER using different input vector for each WL; b) WL vs SER with fixed input vectors; c) WL vs SER, for 5 single-subcarrier simulations ('o') and for 1 128-subcarrier simulation ('*').

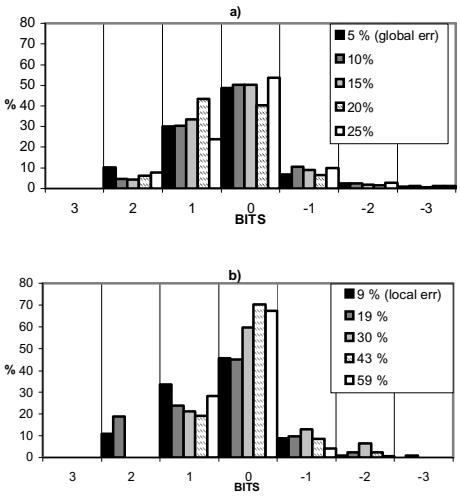

Figure 3.- Histogram of the error between the limit point computed using 128 subcarriers and limit points computed using 1 subcarrier: a) applying method **2** (5%, 10%, 15%, 20%, 25%) to obtain LP and b) applying method **3** (9°, 19°, 30°, 43°, 59°).

Different random vectors are used in each run. The SER estimator variance produces a noisy curve that only allows to extract information about the WLs that produce a SER that clearly diverges from SER_T. The wordlength selection is severely influenced by the values of the input vectors.

Figure 2.b shows how noise is reduced if the values of both noise and data input vectors are maintained and the FxP format of signals is changed. Using the FlP SER obtained through simulation with the fixed set of input vectors as a reference, we can distinguish three regions: I) the SER obtained is indistinguishable from the FlP reference; II) the SER fluctuates around the FlP reference; III) the SER clearly diverges from the reference. Figure 2.b shows the results of using two different sets of input vectors (marked as '*' and 'o'). Both curves have different FlP references (Ref_* and Ref_o) and the small fluctuations around them are within the same order of magnitude but uncorrelated. For instance, the upper SER curve ('*') decrements $1.68 \cdot 10^{-7}$ units from 15 bits to 14 bits, while the lower curve ('o') increments $1.42 \cdot 10^{-6}$ units. The curves are biased with respect to SER_T but their respective regions are approximately the same, due to the variance decrease.

4.2 The limit point as a quality reference

Since short simulations are not accurate, an estimation of ΔSNR_Q cannot be used as a quality reference. We define the limit point as the WL that separates region II from region III. Choosing an WL equal or longer than the limit point assures that SER_Q remains within region II, and that the system has only been degraded slightly. Some guard bits [4] (for example, n=1 or n=2) can be added to the limit WL to assure that the SER remains within region II; the bigger *n* the more overestimated but safer the quantization will be.

The limit point can be selected through different methods. In particular we propose: 1) visual inspection of plotted graphs, 2) setting a global SER relative error (error with respect to the FlP reference: e.g. SER error < 10%), and 3) stating a maximum local SER relative error (relative error between SERs of consecutive wordlengths). In addition, the curves can be low-pass filtered to attenuate the remaining noise.

In order to assess the suitability of the limit point selection methods 2 and 3, we have performed the quantization of different variables of the same algorithm described in section 5. Three quantization scenarios Q_1, Q_2 and Q_3 were selected and each of them was simulated using three different sets of input vectors TB_1, TB_2 and TB_3. Each quantization required approximately to simulate 10 different wordlengths, resulting in a total number of 90 simulations. A quantization scenario Q is defined by a variable or a set of variables that are to be quantized and the format of the rest of variables, that can be FlP or FxP format. A total number of 128 subcarriers were used and the length of the input vector was 100,000 OFDM symbols, in what we consider as *short* simulations. The limit points of the nine possible combinations of quantization scenarios Q_i and testbenches TB_j were calculated using both method 2 (global relative error) and 3 (local relative error) for different relative error thresholds. In particular, we used 5%, 10%, 15%, 20%, 25% for global errors, and 9%, 19%, 30%, 43% and 59% for local errors. The limit points obtained for both methods were very similar, differing at most 2 bits. In both cases small thresholds (i.e. 5% for global error and 9% for local error) produced bigger limit points, and big thresholds (i.e. 25% for global error and 59% for local error) produced smaller limit points. Both methods seem to perform alike.

4.3 Quantization using single subcarrier MC simulations

For the channel model considered the SER vs. SNR response of a single subcarrier and the average of all subcarriers tend to the same value for long simulation times. This is not necessarily true if single-subcarrier simulations are run for a relatively short period of time. However, the information (limit points) extracted from single-subcarrier curves and the one extracted from N-subcarrier curves do not differ significantly. Regions I, II and III of the single-subcarrier simulations can be shifted only a few bits with respect to the regions of an N-subcarrier simulation, depending on the input vectors and the subcarrier index. This result has been confirmed empirically.

Figure 2.c shows the curves corresponding to 5 single-subcarrier short simulations and a 128-subcarrier short simulation (marked with '*'). Through visual inspection we can state that the limit points of all 1-subcarrier curves are close to the 128-subcarrier one, although the curves have different FlP references. For the same nine Q-TB pairs the mean squared error (mse) of the 1-subcarrier simulation limit points with respect to the 128-subcarrier simulation limit point were calculated. Figure 3 shows the histograms of the 128-subcarrier vs 1-subcarrier limit point error, computed for a range of threshold of global and local errors (figures 3.a and 3.b respectively). The limit point error is 0 when the estimation of the complete OFDM simulation is equal to the estimation using 1 subcarrier. The limit point error is negative if there is an overestimation and positive if the limit point is undersized. The latter case is not desirable. Again, both methods produce similar results. The majority of limit points obtained through single-subcarrier simulations match the limit point obtained through 128-subcarrier simulations (i.e. around a 50% for method 2, and around a 60% for method 3).

From the previous empirical results we can state that both method 2 and 3 perform in a similar way. The statistics also show that using a single-subcarrier simulation can lead to a wrong FxP translation, due to the variance in the limit point estimation, however the wordlengths obtained are close to the ones obtained using complete OFDM symbols. We therefore propose two options: a) to quantize using single-subcarrier simulations and adding guard bits (e.g. n=2) to the wordlengths obtained; and b) to compute several single-subcarrier simulation quantizations and, for each variable, select the longer wordlength among the possible values. For instance, by using a few single-subcarrier simulations for a 100-subcarrier OFDM system, the total simulation time can be reduced one order of magnitude.

Table I.- Quantization results using 128-subcarrier MC simulations

Testbench	W (S,Wi,Wf)	R (S,Wi,Wf)	P (S,Wi,Wf)	Y (S,Wi,Wf)	ΔSNR_Q (dB)
TB1	1, 2, 8	0, 8, 7	1, 6, 9	1, 3, 7	0.17
TB2	1, 2, 8	0, 8, 7	1, 6, 9	1, 3, 6	0.27
TB3	1, 2, 8	0, 8, 7	1, 6, 9	1, 3, 6	0.27

Table II.- Results using 1-subcarrier MC simulations

Quant.	W	R	P	Y	ΔSNR_Q
best	1, 2, 8	0, 8, 7	1, 6, 9	1, 3, 8	0.14
worst	1, 2, 7	0, 8, 5	1, 6, 7	1, 3, 5	3.74
safe	1, 2, 9	0, 8, 7	1, 6, 9	1, 3, 8	0.12

The fixed simulation stimuli, the use of the limit point as a quality measure and the use of a small subset of subcarriers are presented as a means to reduce simulation time in a practical situation. It is important to stress that the limit point computation allows discerning which set of WLs produces a better performance result, but it does not give information about the actual SNR loss. The more restrictive the limit point selection criterion is, the better the performance of the final quantized system becomes. The advantage is that computation through accurate simulation of the SNR loss is deferred to the last stage of the quantization process, boosting the overall quantization time.

5. QUANTIZATION OF AN RLS ADAPTIVE EQUALIZER

In this section we present the results of applying the previous ideas to an RLS adaptive equalizer combined with ABL [7] pre-equalization for an OFDM-based modem. The system parameters were: 512-subcarrier OFDM symbol (8µs of useful symbol duration and 1µs CP), 100-symbol OFDM frames (first symbol for piloting), target SER of 10^{-3} (SNR_T=21.3 dB), maximum SNR loss of 0.5 dB and overall data rate of 220 Mbps (190 Mbps without CP). The ABL algorithm was implemented in FlP and the delay between channel estimation and pre-equalization was assumed negligible. The chosen channel was time-varying (delay spread of 150 ns and Doppler spread of 14 Hz) modeled by a stochastic channel radio model [8]. We chose wrap-around and truncation as overflow and underflow to reduce hardware cost. Simulations were run on a Pentium-IV PC at 2.4 Ghz.

We only used 128 subcarriers assuming that the results will closely resemble those for 512 subcarriers. The number of input vectors were 128,000,000 QAM symbols for FlP evaluation, 12,800,000 QAM symbols for the 128-subcarrier simulations, and 100,000 QAM symbols for the 1-subcarrier simulations. The limit points were selected by low-pass filtering the SER curves and selecting the minimum WL that produced a local relative error smaller than a 19 %.

Table I shows the quantization results using 128-subcarrier simulations with three different input vectors. Columns 2 to 4 contain the wordlengths of the key signals of the algorithm. The last column contains the SNR loss estimations obtained via interpolation.

Table II contains some quantization results from 10 quantizations using single-subcarrier simulations. Only one of them met the quality constraint (see first row). The worst case is in the second row. It must be stressed that, after adding 1 bit (n=1) to the wordlengths, all ten cases met the constraints achieving a SNR loss smaller than 0.5 dB. The last row contains the safe quantization that assigns to each variable the longest wordlength from the ten quantizations. The safe quantization complies with the constraints too.

The total approximate quantization times for the different strategies were:

128-subcarrier quantization: 11 h 32 min.
10 x 1-subcarrier quantization: 1 h.
1-subcarrier quantization: 6 min.

Results in table I yield that the quantization obtained using 128-subcarrier MC simulations has similar performances for all sets of input vectors and the results are quite satisfactory (ΔSNR_Q<0.3 dB). As expected, using single-subcarrier simulations almost all subcarriers lead to unacceptable quantizations (9 out of 10), while there is only one that leads to results within range. However, any of the quantization with a guard factor of 1 bit, as well as the safe quantization, produce results that meet the quality constraint . This shows that using only one or more single-subcarrier quantizations it is possible to achieve acceptable results in short times.

6. FINAL CONCLUSIONS

Throughout this paper we have addressed the many problems involved in the quantization of adaptive equalization filters for OFDM. We would like to stress the interesting results obtained regarding the study of different strategies to reduce simulation times. The use of only a few subcarriers for the simulations has proved to be enough to achieve acceptable quantizations while reducing the quantization time two orders of magnitude.

As a conclusion, we state that dividing the whole problem into two independent sub-problems (simulation time reduction and tuned wordlength minimization procedure) enabled us to achieve a fast and practical method to quantize OFDM adaptive equalizers.

7. ACKNOWLDEGMENTS

This work has been partially supported by the Spanish Ministry of Science and Technology under project TIC2003-09061-C03-02.

REFERENCES

[1] J. Bingham, "Multicarrier Modulation for Data Transmission: An Idea Whose Time Has Come", *IEEE Communications Magazine*, pp. 5-14, May 1990.

[2] J. G. Proakis, Digital Communications, McGraw-Hill, 2001

[3] S. Kim, K. Kum and W.Sung, "Fixed-Point Optimization Utility for C and C++ Based Digital Signal Processing Programs", *IEEE Transactions on Circuits and Systems*, vol.45, no.11, pp. 429-435, 1998.

[4] R. Cmar, P. Schaumont, S. Vernalde and I. Bolsens: "A Methodology and Design Environment for DSP ASIC Fixed Point Refinement", in *Proc. DATE Conference 1999,* Munich, Germany, 1999, pp. 271-276.

[5] G. A. Constantinides, "Perturbation Analysis for Word-length Optimization", in *Proc. FFCM 2003,* Lisbon, Portugal, Sept. 2003, pp. 81-90.

[6] J. A. Lopez, C. Carreras, G. Caffarena, O. Nieto-Taladriz, "Fast characterization of the noise bounds derived from coefficient and signal quantization", in *Proc. ISCAS 2003*, Bangkok, Thailand, May 2003, vol. 4, pp. 309-312.

[7] R. F. H. Fischer, J. B. Huber, "A New Loading Algorithm for Discrete Multitone Transmission", in *Proc. GLOBECOM '96*, London, U.K., Nov. 1996, vol. 1, pp. 724 –728.

[8] R. Heddergott, U.P. Bernhard, B.H. Fleury, "Stochastic radio channel model for advanced indoor mobile communication systems", in *Proc. IEEE International Symposium on Personal, Indoor and Mobile Radio Communications*, Helsinki, Finland, Sep. 1997, vol. 1, pp. 140-144.