VARIABLE STEP-SIZE BASED ONLINE ACOUSTIC FEEDBACK NEUTRALIZATION IN SINGLE-CHANNEL ACTIVE NOISE CONTROL SYSTEMS

Muhammad Tahir AKHTAR[1] *and Wataru MITSUHASHI*[2]

[1]The Center for Frontier Science and Engineering (CFSE),
[2]Department of Information and Communication Engineering,
University for Electro-Communications, 1-5-1 Chofugaoka, Chofu, Tokyo 182-8585, JAPAN
Email: akhtar@ice.uec.ac.jp

ABSTRACT

This paper concerns acoustic feedback neutralization (FBN) during online operation of single-channel active noise control (ANC) systems. In existing approach, two FIR filters are used for this task: adaptive for feedback path modeling (FBPM) and fixed for FBN. Previously, we have proposed a simplified method where these two tasks of modeling and neutralization have been combined into one feedback path modeling and neutralization (FBPMN) adaptive filter. Here we introduce an intuition based based variable step-size (VSS) parameter, for LMS equation of FBPMN filter. This VSS is motivated from the fact that the error signal of FBPMN filter contains a disturbance component that is decreasing in nature. The computer simulations are carried out which demonstrate that the proposed method achieves better performance than the existing methods and at somewhat reduced computational cost.

1. INTRODUCTION

A block diagram of a single channel feedforward active noise control (ANC) systems [1] is shown in Fig. 1, where components above and below the dashed line are in acoustic and electronic domain, respectively. Here $P(z)$ is the primary path between the noise source and the error microphone, $S(z)$ is the secondary path between canceling loudspeaker and error microphone, $F(z)$ is the feedback path from canceling loudspeaker to the reference microphone, and filtered-x LMS (FxLMS) algorithm [2, 3] is used to adapt the ANC adaptive filter $W(z)$. The ANC system uses the reference microphone to pick up the reference noise $x(n)$, processes this input with an adaptive filter to generate an antinoise $y(n)$ to cancel primary noise acoustically in the duct, and uses an error microphone to measure the error $e(n)$ and to update the adaptive filter coefficients. Unfortunately, a loudspeaker on a duct wall will generate plane waves propagating both upstream and downstream. Therefore, the antinoise output to the loudspeaker not only cancels noise downstream, but also radiates upstream to the reference microphone, resulting in a corrupted reference signal $x(n)$. This coupling of acoustic waves from secondary loudspeaker to the reference microphone is called *acoustic feedback*.

Consider Fig. 1, and assuming that the feedback neutralization (FBN) filter $\hat{F}(z)$ is not present, the error

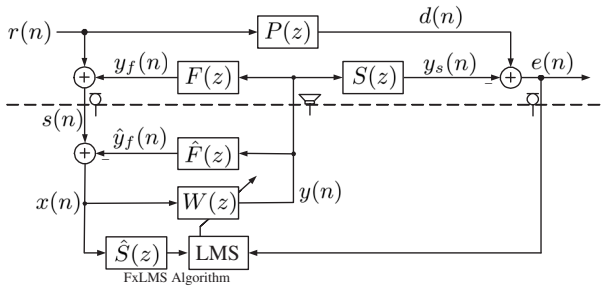

Figure 1: Block diagram of single-channel ANC system with fixed feedback neutralization.

signal z-transform is expressed as

$$\begin{aligned} E(z) &= P(z)R(z) - S(z)Y(z) \\ &= P(z)R(z) - S(z)\frac{W(z)R(z)}{1 - W(z)F(z)}. \end{aligned} \quad (1)$$

The convergence of $W(z)$ means (ideally) $E(z) = 0$. This requires $W(z)$ to converge to the following solution:

$$W^{\circ}(z) = \frac{P(z)}{S(z) + P(z)F(z)}. \quad (2)$$

This simple analysis shows that due to acoustic feedback the ANC system will be unstable, if the coefficients of $W(z)$ are large enough so that $W(z)F(z) = 1$ at some frequency. Furthermore, the $W(z)$ may not converge to the optimal solution $P(z)/S(z)$.

The simplest approach to solving the feedback problem is to use a separate FBN filter with in the controller, as shown in Fig. 1. This electrical model of the feedback path is driven by the secondary source control signal, $y(n)$, and its output is subtracted from the reference sensor signal. The FBN filter, $\hat{F}(z)$, may be obtained offline prior to the operation of ANC system when the reference noise $r(n)$ does not exist. In many practical cases, however, $r(n)$ always exists, and $F(z)$ may be time varying. For these cases, online modeling of $F(z)$ is needed to ensure the convergence of the FxLMS algorithm for ANC systems.

Broadly speaking there are two types of signal processing methods for adaptive feedback neutralization: 1) IIR-filter based methods, and 2) FIR-filter based methods. In IIR based structures [4–10], the stability cannot

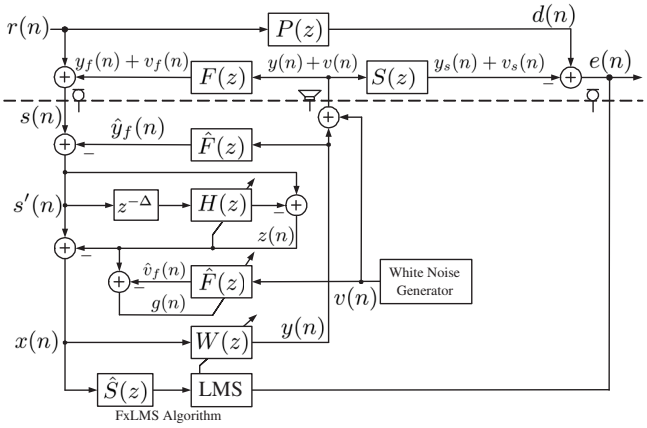

Figure 2: Kuo's method with signal discrimination filter for online FBPM in single-channel ANC systems [13].

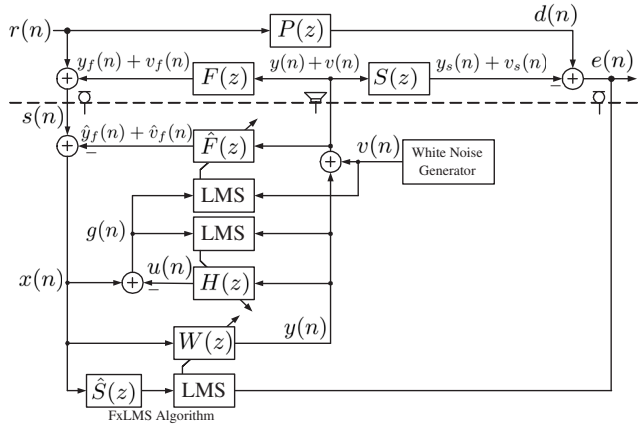

Figure 3: A simplified method with adaptive noise cancelation (ADNC) filter for online FBPMN in single-channel ANC systems [15].

be guaranteed, the adaptation may converge to a local minimum, and performance is degraded in the presence of strong acoustic feedback. Consequently, only the FIR-based methods are examined further in this paper. A detailed review of existing FIR-filter-based methods [11–13] for online FBPM can be found in [14]. In the existing approaches [13, 14], two FIR filters are used for adaptive feedback neutralization: adaptive for feedback path modeling (FBPM) and fixed (with weights being copied from adaptive one) for FBN. In [15], we have proposed a simplified method where these two tasks of modeling and neutralization have been combined into one FIR adaptive filter $\hat{F}(z)$. Here we modify this method by incorporating a variable step-size (VSS) in LMS algorithm for adapting $\hat{F}(z)$. The step size is varied in accordance with the disturbance-component in the error signal of $\hat{F}(z)$. It is observed that the error signal is corrupted by a disturbance signal, which is initially very large and converges to (ideally) zero. Hence a small step size is used initially, and later its value is increased accordingly. Computer simulation demonstrate the improved performance of the proposed method, which is achieved at a little increased computational cost as compared with the previous method [15].

The rest of the paper is organized as follows: Section 2 gives a brief overview of Authors' previous work [14,15] in comparison with the Kuo's method [13]. Section 3 describes the proposed method, where an intuition based time-varying step-size is introduced in the adaptation of FBPM filter. Section 4 details the computer simulations and Section 5 gives the concluding remarks.

2. OVERVIEW OF PREVIOUS METHODS

The Kuo's method [13] is shown in Fig. 2. Here the noise source is assumed to be predictable. The FBPM is achieved by using an additive-random noise based adaptive filter, $\hat{F}(z)$. The weights of FBPM filter, $\hat{F}(z)$, are copied to the FBN filter, $\hat{F}(z)$, taking $y(n)$ as input. A discrimination filter, $H(z)$, based on a decorrelation delay, removes the predictable component from the desired response of the FBPM filter. This method achieves improved online FBPM, however, there are a few problems: 1) the performance depends on the proper choice of the decorrelation delay, and 2) it works only for predictable noise sources.

To overcome these problems, in [14] authors have proposed a method using adaptive noise cancellation (ADNC) filter in place of the discrimination filter in [13]. The main advantage of this method is that it can work for both predictable and un-predictable noise sources. Furthermore, the method does not require decorrelation delay. In these two methods, two filters are used for $\hat{F}(z)$: adaptive for FBPM and fixed for FBN. By combining these two task of modeling and neutralization in one adaptive filter, as feedback path modeling and neutralization (FBPMN) filter, a simplified method is proposed in [15], and is shown in Fig 3. This method, hereafter called Previous method, does not require selection of appropriate decorrelation delay and gives an improved performance as compared with the Kuo's method [13], and at somewhat reduced computational cost.

3. PROPOSED METHOD

3.1 Description

As shown in Fig. 4, the proposed method is a one-step modification of the previous method shown in Fig. 3. As in previous methods [12–15], a low-level random noise signal $v(n)$, uncorrelated with the reference signal $x(n)$ is added with the output $y(n)$ of $W(z)$. The sum $[y(n)+v(n)]$ is propagated by the canceling loudspeaker. The signal propagates downstream to generate the error signal as

$$e(n) = d(n) - y_s(n) - v_s(n), \tag{3}$$

and upstream to give corrupted reference signal as

$$s(n) = r(n) + y_f(n) + v_f(n), \tag{4}$$

where $d(n) = p(n) * r(n)$ is the primary noise signal; $y_s(n) = s(n) * y(n)$ is the antinoise signal; $v_s(n)$ is a component due to the modeling signal $v(n)$; $y_f(n) = f(n) * y(n)$ and $v_f(n) = f(n) * v(n)$ are the feedback components due to the canceling signal $y(n)$ and the modeling signal $v(n)$, respectively; $p(n)$, $s(n)$, $f(n)$ are

impulse responses of $P(z)$, $S(z)$, and $F(z)$, respectively; and $*$ denotes the linear convolution. The output of the FBPMN filter, $\hat{F}(z)$, is subtracted from $s(n)$ to generate the reference signal for $W(z)$ as

$$x(n) = r(n) + [y_f(n) - \hat{y}_f(n)] + [v_f(n) - \hat{v}_f(n)]. \quad (5)$$

The ANC filter $W(z)$ is adapted by FxLMS algorithm as

$$\boldsymbol{w}(n+1) = \boldsymbol{w}(n) + \mu_w e(n)\boldsymbol{x}'(n), \quad (6)$$

where μ_w is the step size for $W(z)$, $\boldsymbol{w}(n) = [w_0(n), w_1(n-1), \cdots, w_{L-1}(n)]^T$ is the tap-weight vector for $W(z)$, $\boldsymbol{x}'(n) = [x'(n), x'(n-1), \cdots, x'(n-L+1)]^T$ is the signal vector, L is tap-weight length of $W(z)$ and $x'(n) = \hat{s}(n) * x(n)$ is the reference signal $x(n)$ filtered through the secondary-path model, $\hat{S}(z)$. The ADNC filter $H(z)$ takes $y(n)$ as its input, and $x(n)$ as its desired response to generate the error signal

$$g(n) = r(n) + [y_f(n) - \hat{y}_f(n)] + [v_f(n) - \hat{v}_f(n)] - u(n), \quad (7)$$

where $u(n)$ is the output of $H(z)$. The coefficients of $H(z)$ are updated by LMS algorithm

$$\boldsymbol{h}(n+1) = \boldsymbol{h}(n) + \mu_h g(n)\boldsymbol{y}(n), \quad (8)$$

where μ_h is step size parameter for $H(z)$, $\boldsymbol{h}(n) = [h_0(n), h_1(n-1), \cdots, h_{M-1}(n)]^T$ is the tap-weight vector for $H(z)$, $\boldsymbol{y}(n) = [y(n-1), y(n-2), \cdots, y(n-M)]^T$ is the signal vector, and M is tap-weight length of $H(z)$.

In (7), $[v_f(n) - \hat{v}_f(n)]$ is error signal required for adaptation of FBPMN filter $\hat{F}(z)$. The gradient in LMS equation for $\hat{F}(z)$ is computed using the same error signal $g(n)$ and the random signal $v(n)$ as input signal, resulting in the following LMS update equation for $\hat{F}(z)$

$$\hat{\boldsymbol{f}}(n+1) = \hat{\boldsymbol{f}}(n) + \mu_f(n) g(n) \boldsymbol{v}(n), \quad (9)$$

where $\mu_f(n)$ is a variable step-size (VSS) parameters (the motivation and procedure to vary the step size is explained later), $\hat{\boldsymbol{f}}(n) = [\hat{f}_0(n), \hat{f}_1(n-1), \cdots, \hat{f}_{N_1-1}(n)]^T$ is the tap-weight vector for $\hat{F}(z)$, $\boldsymbol{v}(n) = [v(n), v(n-1), \cdots, v(n-N_1+1)]^T$ is the signal vector, and N_1 is the tap-weight length of $\hat{F}(z)$. Assuming that $H(z)$, and $\hat{F}(z)$ have converged; $u(n) \to r(n) + [y_f(n) - \hat{y}_f(n)]$, $\hat{v}_f(n) \approx v_f(n)$ and $\hat{y}_f(n) \approx y_f(n)$. Thus input to $W(z)$ is $x(n) \approx r(n)$, and is free of any acoustic feedback components.

3.2 Time Varying Step-Size for Feedback-Path Modeling Filter

Consider error signal $g(n)$ as given in (7). Here the component $[v_f(n) - \hat{v}_f(n)]$ is the desired error signal for $\hat{F}(z)$, and the rest of the part, $r(n) + [y_f(n) - \hat{y}_f(n)] - u(n)$, acts as a disturbance for the adaptation of $\hat{F}(z)$. Thanks to the supporting ADNC filter $H(z)$ being excited by $y(n)$, the output $u(n)$ of $H(z)$ would converge to $r(n) + [y_f(n) - \hat{y}_f(n)]$ that is correlated with $y(n)$, and hence the disturbance in the adaptation of $\hat{F}(z)$ would (ideally) converge to zero. This observation leads to

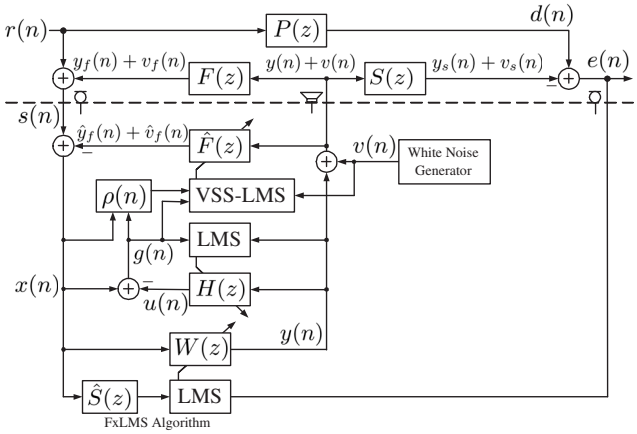

Figure 4: Proposed method for online FBPM in single-channel ANC systems.

use a small value for the step-size $\mu_f(n)$ at startup of ANC system and use a somewhat larger value at the later stage. It is worth mentioning that the large value should be carefully selected so that a small steady-state mismatch is achieved. Considering the signals $x(n)$ and $g(n)$, as given in (5) and (7), respectively, we define a ratio

$$\rho(n) = \frac{P_g(n)}{P_x(n)}, \quad (10)$$

where $P_g(n)$ and $P_x(n)$ indicate the power of $g(n)$ and $x(n)$, respectively. These powers can be estimated online using lowpass estimator of type

$$P_\gamma(n) = \lambda P_\gamma(n-1) + (1-\lambda)\gamma^2(n), \quad (11)$$

where λ is the forgetting factor ($0.9 < \lambda < 1$). From (5) and (7), the ratio $\rho(n)$ can be expressed as:

$$\rho(n) = \frac{P_g(n)}{P_x(n)} = \frac{P_{[r(n)+y_f(n)-\hat{y}_f(n)]-u(n)} + P_{[v_f(n)-\hat{v}_f(n)]}}{P_{[r(n)+y_f(n)-\hat{y}_f(n)]} + P_{[v_f(n)-\hat{v}_f(n)]}}. \quad (12)$$

Initially when the ANC system is started at $n = 0$; $u(n) = 0$, $\hat{y}_f(n) = 0$ and $\hat{v}_f(n) = 0$, as it is customary to initialize the adaptive filters by zero coefficients; the ratio $\rho(0)$ is given as

$$\rho(0) \cong \frac{P_{[r(n)+y_f(n)]} + P_{v_f(n)}}{P_{[r(n)+y_f(n)]} + P_{v_f(n)}} \cong 1.0. \quad (13)$$

In the steady-state as $n \to \infty$, $u(n) \to r(n) + [y_f(n) - \hat{y}_f(n)]$, $\hat{y}_f(n) \to y_f(n)$ and $\hat{v}_f(n) \to v_f(n)$, and hence numerator in (12) converges to (ideally) zero, whereas the denominator is non-zero and would converge to $P_{r(n)}$, and hence $\lim_{n\to\infty} \rho(n) \to 0$. Considering these properties of the parameter $\rho(n)$; $\rho(0) \cong 1.0$ and $\rho(\infty) \to 0$; the time varying step-size, $\mu_f(n)$, for the adaptation of $\hat{F}(z)$ in (9) is computed as

$$\mu_f(n) = \rho(n)\mu_{f_{\min}} + (1-\rho(n))\mu_{f\max}, \quad (14)$$

where $\mu_{f_{\min}}$ and $\mu_{f\max}$ are the experimentally determined values for lower and upper bounds of the step size. These values are selected so that neither adaptation is too slow nor it becomes unstable.

Table 1: Computational complexity analysis on the basic of computations required per iteration.

		Kuo's method	**Previous method**	**Proposed method**
FxLMS algorithm for $W(z)$	$\times$	$2L+N_2+1$	$2L+N_2+1$	$2L+N_2+1$
	$+$	$2L+N_2-2$	$2L+N_2-2$	$2L+N_2-2$
LMS algorithm for $H(z)$	$\times$	$2M+1$	$2M+1$	$2M+1$
	$+$	$2M$	$2M$	$2M$
Reference Signal $x(n)$ and LMS algorithm for $\hat{F}(z)$	$\times$	$3N_1+1$	$2N_1+1$	$2N_1+1$
	$+$	$3N_1+2$	$2N_1+1$	$2N_1+1$
Variable step-size (VSS)† for $\hat{F}(z)$	$\times$	$-$	$-$	6
	$+$	$-$	$-$	2
TOTAL	$\times$	$2L+2M+3N_1+N_2+3$	$2L+2M+2N_1+N_2+3$	$2L+2M+2N_1+N_2+9$
	$+$	$2L+2M+3N_1+N_2$	$2L+2M+2N_1+N_2-1$	$2L+2M+2N_1+N_2+1$
Example: $L=512, M=N_2=128, N_1=256$	$\times$	2179	1923	1929
	$+$	2176	1919	1921

†In addition to above, the VSS in proposed method requires one division per iteration.

3.3 Computational Complexity

A computational complexity analysis, based on the number of multiplications and additions per iteration, is presented in Table 1 for the methods described in this paper. Here, L, M, N_1, and N_2 are the tap-weight lengths of $W(z)$, $H(z)$, $\hat{F}(z)$, and $\hat{S}(z)$, respectively. We see that the previous method requires N_1 fewer multiplications per iteration and N_1+1 fewer additions per iteration, as compared with Kuo's method. The structure of the proposed method is same as that of the previous method, except for the computation of variable step-size parameter as described earlier, and hence requires a few more computations per iteration as compared to previous method [15], yet the computational cost is somewhat lower as compared to Kuo's method [13]. This saving in computational cost is advantageous when length of the adaptive filter is long, which is usually the case in practical ANC systems. Numerical values for an example case are also give in Table 1.

4. COMPUTER SIMULATIONS

This section presents the simulation experiments performed to verify the effectiveness of the proposed method in comparison to Kuo's method [13], and previous method [15]. For acoustic paths the experimental data provided by [1] is used. Using this data, $P(z)$, $S(z)$ and $F(z)$ are modeled as FIR filters of tap-weight lengths 48, 16, and 32, respectively. The adaptive filter $W(z)$, $H(z)$ and $\hat{F}(z)$ are FIR filters of tap-weight length $L=32$, $M=16$, and $N_1=32$, respectively. All the adaptive filters are initialized by null vectors of an appropriate order. The reference signal $r(n)$ comprises sinusoids of 150, 300 and 450 Hz and a zero-mean white noise is added with SNR of 30 dB. The modeling excitation signal $v(n)$ is a zero-mean white Gaussian noise of variance 0.05. A sampling frequency of 4 kHz is used. The step size parameters are adjusted for fast and stable convergence, and by trial-and-error are found to be, Kuo's method and Previous method: $\mu_w = 5\times10^{-6}$, $\mu_f = 5\times10^{-3}$, $\mu_h = 5\times10^{-4}$, Proposed method: $\mu_w = 5\times10^{-6}$, $\mu_{f_{\min}} = 5\times10^{-3}$, $\mu_{f\max} = 1\times10^{-2}$, $\mu_h = 2\times10^{-3}$. The decorrelation delay Δ in Kuo's method is 30.

Figure 5 shows the simulation results for various methods discussed in this paper, where curves shown are obtained by averaging over 10 realizations of the process. Figure 5(a) shows curves for the estimation error in the feedback path, $\Delta F(n)$, being defined as

$$\Delta F(n) = \frac{\|\boldsymbol{f} - \hat{\boldsymbol{f}}(n)\|^2}{\|\boldsymbol{f}\|^2}, \tag{15}$$

where $\boldsymbol{f}$ and $\hat{\boldsymbol{f}}(n)$ are impulse-response vectors for $F(z)$ and $\hat{F}(z)$, respectively, and $\|\cdot\|^2$ is squared-Euclidean norm of the quantity inside. We see that the the proposed method gives very fast convergence speed as compared with the Kuo's method and the previous method. The reason for this improved performance is time varying step-size parameter. Figure 5(b) shows the curves for the estimation error for $W(z)$, $\Delta W(n)$, being defined as

$$\Delta W(n) = \frac{\|\boldsymbol{w}^\circ - \hat{\boldsymbol{w}}(n)\|^2}{\|\boldsymbol{w}^\circ\|^2}, \tag{16}$$

where $\boldsymbol{w}^\circ$ is the optimal value of the weight vector of the ANC controller $W(z)$. This is obtained by using FxLMS algorithm under no acoustic feedback condition. Again the proposed method achieves better performance than the other methods. The corresponding curves for mean square error are shown in Fig. 5(c). We see that, without FBPMN, the the noise reduction performance of the ANC system is very poor, with Author's methods giving better performance than the Kuo's method. Figure 5(d) shows curves for mean value of (squared) error in the reference signal $x(n)$ used in adaptation of $W(z)$, being defined as

$$\Delta X(n) = [x(n) - r(n)]^2, \tag{17}$$

where $r(n)$ is the noise source signal. Ideally this measure should converge to zero, as $x(n) \to r(n)$. It is evident that proposed method is better able to remove the acoustic feedback, than the other methods. The variation of parameter $\rho(n)$ and VSS $\mu_f(n)$ for adaptation of $\hat{F}(z)$ in the proposed method are shown in Figs. 5(e), (f), respectively. As described earlier, $\rho(0) \cong 1.0$ and $\rho(\infty) \to 0$ and $\mu_f(n)$ varies accordingly. Thanks to this time-varying step-size parameter, the overall performance of the proposed method is better than the other methods discussed in this paper.

5. CONCLUDING REMARKS

In conclusion, here we have presented a modification to our previous previous method for acoustic feedback neutralization in ANC systems. The modified method

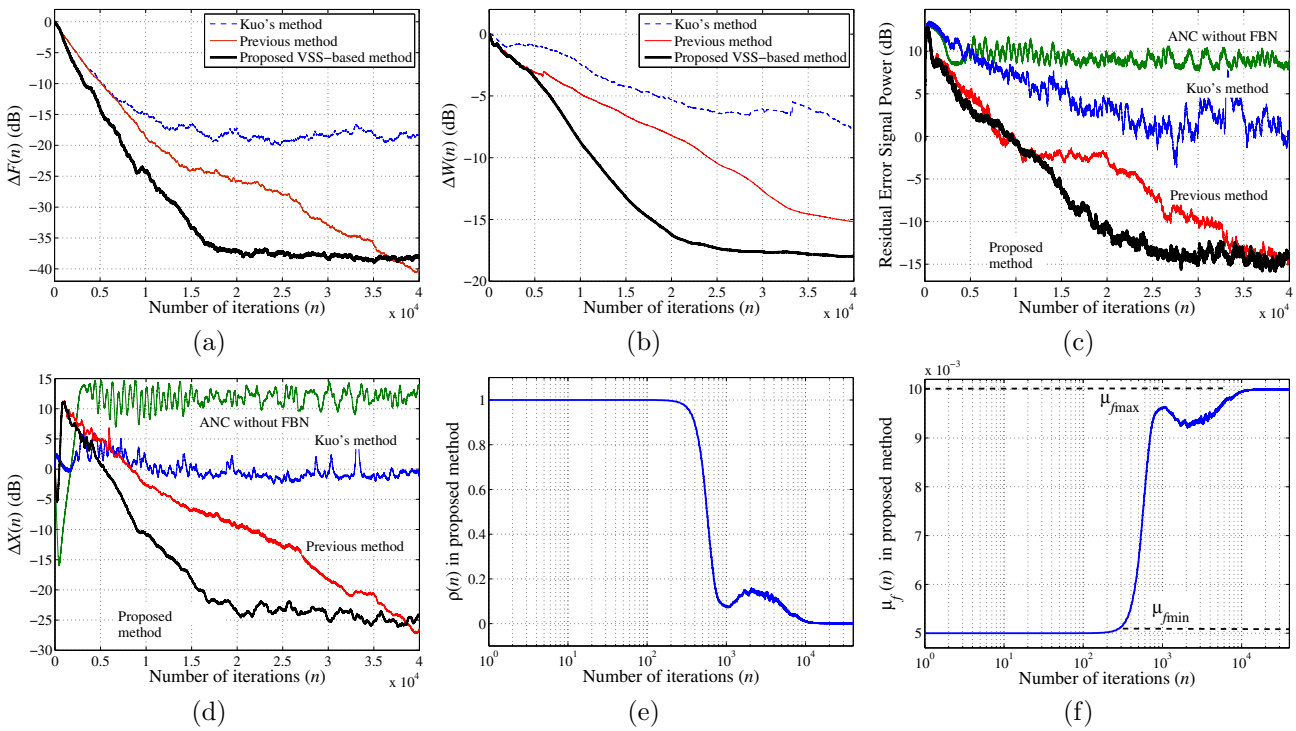

Figure 5: (a) Estimation error in feedback-path, $\Delta F(n)$. (b) Estimation error in ANC filter, $\Delta W(n)$. (c) Power of residual error signal $e(n)$. (d), Squared error in reference signal, $\Delta X(n)$. (e) Parameter $\rho(n)$ in the proposed method. (f) VSS, $\mu_f(n)$, used in the adaptation of $\hat{F}(z)$ in the proposed method.

uses a VSS in the adaptation of FBPMN filter $\hat{F}(z)$, where a small value is selected initially as the disturbance in the desired response is very large. In the later stage, the disturbance decreases (ideally to zero), and the step-size is increased accordingly. We have demonstrated through the computer simulations, that the proposed method gives improved performance. This improved performance is achieved with only a slight increase in computational cost as compared with the previous method [15].

REFERENCES

[1] S. M. Kuo, and D. R. Morgan, *Active Noise Control Systems-Algorithms and DSP Implementation*, New York: Wiley, 1996.

[2] ———, "Active Noise Control: A tutorial review," *Proc. IEEE*, vol. 87, no. 6, pp. 943-973, Jun. 1999.

[3] B. Widrow, and S. D. Stearns, *Adaptive Signal Processing*. Prentice Hall, New Jersey, 1985.

[4] L. J. Eriksson, "Development of the filtered-U algorithm for active noise control," *J. Acoust. Soc. Am.*, vol. 89, no. 1, pp. 257–265, Jan. 1991.

[5] D. H. Crawford, R. W. Stewart, and E. Toma, "A novel adaptive IIR filter for active noise control," in *Proc. ICASSP*, 1996, vol. 3, pp. 1629-1632.

[6] D. H. Crawford, and R. W. Stewart, "Adaptive IIR filtered-v algorithms for active noise control," *J. Acoust. Soc. Am.*, vol. 101, no. 4, pp. 2097–2103, Apr. 1997.

[7] X. Sun, and D. S. Chen, "A new infinte impulse response filter-based adaptive algorithm for active noise control," *J. Sound Vib.*, vol. 258, no. 2, pp. 385–397, Nov. 2002.

[8] J. Lu, C. Chen, X. Qiu, and B. Xu, "Lattice form adaptive infinite impulse response filtering algorithm for active noise control," *J. Acoust. Soc. Am.*, vol. 113, no. 1, pp. 327–335, Jan. 2003.

[9] X. Sun, and G. Meng, "Steiglitz-Mcbride type adaptive IIR algorithm for active noise control," *J. Sound Vib.*, vol. 273, no. 1–2, pp. 441–450, May 2004.

[10] J. Lu, X. Qiu, and B. Xu, "The application of adaptive IIR filter in active noise control with consideration of strong acoustic feedback," in *Proc. Int. Conf. Acoust.*, 2004, vol. 3, pp. III-1951–2.

[11] L. A. Poole, G. E. Warnaka, and R. C. Cutter, "The implementation of digital filters using a modified Widrow-Hoff algorithm for the adaptive cancellation of acoustic noise," *in Proc. ISCAS*, 1984, pp. 21.7.1-4.

[12] S. M. Kuo, and J. Luan, "On-Line Modeling and Feedback Compensation for Multiple-Channel Active Noise Control Systems," *Applied Signal Processing*, vol. 1, no. 2, pp. 64-75, 1994.

[13] S. M. Kuo, "Active Noise Control System and Method for On-Line Feedback Path Modeling," *US Patent 6,418,227*, Jul. 9, 2002.

[14] M. T. Akhtar, M. Abe, and M. Kawamata, "On Active Noise Control Systems With Online Acoustic Feedback Path Modeling," IEEE Trans. Audio Speech Language Processing. vol. 15, no. 2, pp. 593-600, Feb. 2007.

[15] M. T. Akhtar, M. Tufail, M. Abe, and M. Kawamata, "Acoustic Feedback Neutralization in Active Noise Control Systems," *IEICE Electron. Express.* vol. 4, no. 7, pp. 221-226, Apr. 2007.