Integration of Wireless Technologies in an Advanced Surface Movement Guidance and Control System Network

António M. Grilo, Romain Mathieu, Christian Axelsson, Mário M. Nunes

Abstract—**The continuous growth of air traffic leads to an escalating number of accidents and incidents on surface movement, demanding additional safety mechanisms. The Advanced Surface Movement Guidance and Control Systems (A-SMGCS) allow continuous surveillance, monitoring and guidance of surface assets, greatly reducing the hazard probability. The development and demonstration of an EGNOS based A-SMGCS is the objective of the AIRNET project.**

The AIRNET project addresses all A-SMGCS components, from the human-machine interface to the underlying network. This paper focuses the underlying network architecture, which seamlessly integrates disparate wireless technologies like VDL-4, UHF, Wi-Fi and TETRA to support the AIRNET A-SMGCS services in a way that is completely transparent to the user.

Index Terms—**AIRNET, A-SMGCS, VDL-4, UHF, Wi-Fi, TETRA, TCP/IP**

I. Introduction

The continuous and steady growth of air traffic leads to an escalating number of accidents and incidents on surface movements. In case of bad meteorological conditions or low visibility, since the surveillance and control of movements are based mostly on the "see and be seen" principle, airport stakeholders have little or no knowledge of ground surface traffic, thus leading to ground movement hazards (risks of runway incursions, risks of incursions into dangerous and restricted areas and risks of collisions).

In addition, airport congestion is also becoming an increasing problem, and already a limiting factor at several European airports. Major airports are becoming more and more capacity constrained, which results in significant delays and causes frustration and difficulties both for passengers and for aircraft operators. In case of crisis situations (e.g. traffic overload or air traffic control disruption), the management of the passengers flow becomes chaotic, thus leading to potentially hazardous situations.

The high-level objectives of AIRNET (AIRport NETwork for Mobiles Surveillance & Alerting) are to improve airport users safety on all the areas of the airport (by providing essential and reliable information to relevant airport stakeholders) and to improve the efficiency of operations (by providing services to airport operators to optimize the flows of vehicles on the apron area and to cope with crisis and emergency situations). The low-cost of the AIRNET infrastructure will likely make AIRNET attractive to small and medium size airports. A first prototype of the system will be deployed at Oporto airport (mid-size airport, Portugal) for an extensive validation campaign [1].

II. AIRNET Architecture

The AIRNET services aim to improve safety for the airport movements of vehicles and aircrafts on the manoeuvring and apron areas [2]. For this purpose four different services are provided by AIRNET: surveillance service, control service, guidance service and decision support service.

The Surveillance service aims to provide continuous surveillance of the traffic situation for the air traffic controller. The surveillance service includes Traffic Information (mobiles position and identity) and Traffic Context (airport map representation). The traffic data needs to be provided with an adequate accuracy and update rate in order to support the decision-making process.

The Control service provides Conflict/Infringement alerts to the air traffic controller. For example, a driver of an airport vehicle, during a runway inspection is first "visually identified" by the control service on the vehicle HMI and, later on, is "soundly identified" if an aircraft is approaching and the vehicle is still on the runway.

The Guidance service aims to provide navigation information for all the areas of the airport. This service intends to reduce navigation errors, which might occur in reduced visibility conditions or with non-experienced drivers. The Guidance service allows vehicle drivers to visualize their own positions on a moving map of the airport.

Manuscript received February 4, 2005. This work was supported in part by the European Commission under the 6th Framework Programme.

A. M. Grilo is with INESC-ID/INOV, Rua Alves Redol, N. 9, 1000-029 Lisboa, Portugal (phone: +351-213100226; e-mail: antonio.grilo@inov.pt).

R. Mathieu is with M3 Systems, 1, rue des Oiseaux, 31410 Lavernose, France (email: mathieu@m3systems.net).

C. Axelsson is with C.N.S. Systems, S:t Larsgatan 32 B, SE-582 24 Linköping, Sweden (email: christian.axelsson@cns.se).

M. S. Nunes is with INESC-ID/INOV, Rua Alves Redol, N. 9, 1000-029 Lisboa, Portugal (email: mario.nunes@inov.pt).

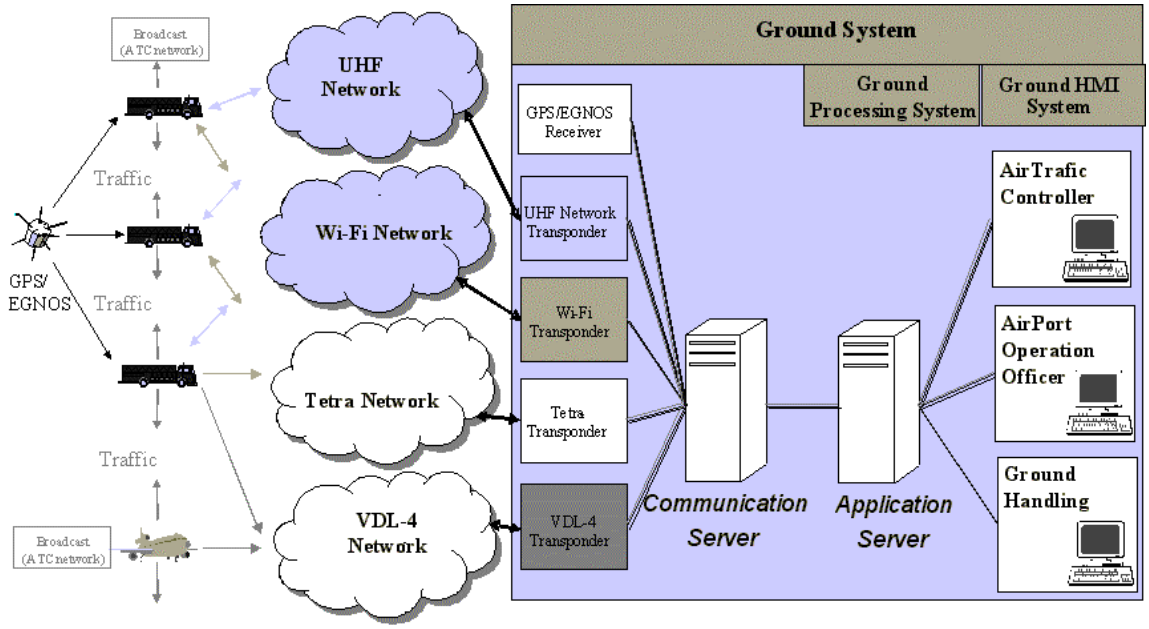

Fig. 1. General architecture of the AIRNET A-SMGCS platform [1].

The Decision Support service aims to help the drivers, airport operation officer and the ground manager to take efficient and pertinent decisions in order to optimize operational performance through better management of the resources for the apron area.

These services are directly mapped to different uni-directional or bi-directional information flows, each with its specific set of bandwidth and QoS requirements. All these information flows are compliant with the standard ASTERIX [3] data format specified by Eurocontrol (European Organization for the Safety of Air Navigation).

The AIRNET services are delivered to the actors over a platform that consists of three main components: onboard system, ground system and communication networks. A diagram depicting the general architecture of the AIRNET platform is shown in Fig. 1.

The onboard system, which is deployed in each vehicle, includes the GPS/EGNOS position sensor, the Communication and Navigation Unit (CNU) that implements all onboard service applications, and the vehicle driver human-machine interface (HMI). It interfaces to the AIRNET communication networks and manages the software applications, which provide the AIRNET services.

The ground system consists of an Application Server (AS) to evaluate the overall situation and manage the services, a ground HMI to interface with the ground actors (air traffic controller, airport operation officer and ground handling) and a Communications Server (CS) to manage the communication links to the onboard systems. There is also a monitor configuration with a set of specific functionalities for each of the three ground actors.

The communication networks allow the exchange of data between vehicles and ground system, covering both the maneuvering area and the apron area. Several private networks, depending on the airport area, are used to demonstrate different objectives. The main networks will be based on the TETRA [4] and Wi-Fi (IEEE 802.11) [5] technologies with the UDP/IP protocol stack on top (optional in the case of TETRA). The use of the TETRA network demonstrates the ability of the AIRNET platform to be mapped on an ever-deployed airport network. The use of the Wi-Fi technology demonstrates the ability of exploiting innovative networks. Other networks might also be used, such as a UHF communication network and a VDL-4 network [6]. The latter demonstrates the ability of the AIRNET platform to be compliant with one aeronautical network.

III. Network Architecture

The details of the communication network must remain transparent both to the services and to the actors, so that the former become more flexible and adaptable, and the latter can concentrate on operational activities. However, the integration of such diverse wireless communication technologies is not trivial, not only due to the different transponder interfaces and protocol stacks, but also due to the different capabilities and limitations of those technologies. In AIRNET, network transparency is achieved by the CNU at the onboard system, and by the CS at the ground system.

The CNU (see Fig. 2) is an embedded system based on a PC architecture running LINUX. It runs the onboard AIRNET Software Application Modules, and it abstracts the network technology by acting as an ASTERIX gateway between the onboard network transponders and the Software Application Modules, verifying the validity of carried ASTERIX messages. In the role of Communication Medium Selector, the CNU selects which wireless network transponder to use for transmission of ASTERIX messages issued by the onboard system to the ground system. The decision can be based on

either fixed configuration, or taking into account network availability provided by the Service Monitoring functions. Data received from the GNSS receiver are translated into Traffic Information messages and routed to the Traffic Information software module for further processing and inclusion in ASTERIX messages. The driver HMI software module is the only entity linked to the Onboard Display Equipment. The onboard network transponders connect to the CNU directly through PCMCIA (Wi-Fi) or RS232 (TETRA, UHF, VDL-4) interfaces, and each is controlled by a separate transponder driver, which also delivers transponder status information to the CNU for use by the Service Monitoring software module. In the case of Wi-Fi and TETRA, the transponder driver also abstracts UDP/IP communication.

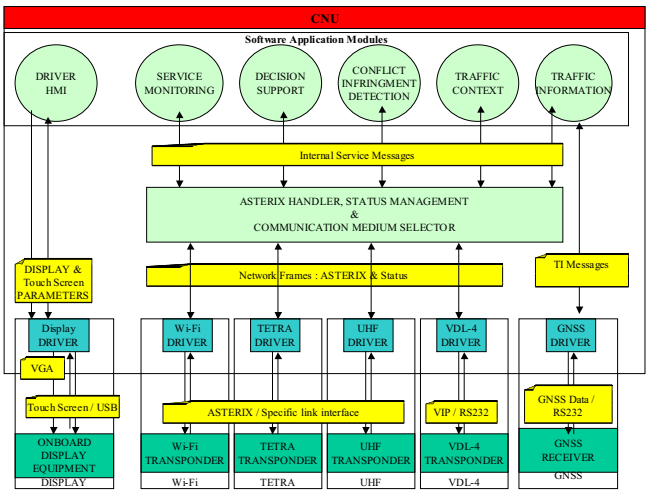

Fig. 2. Detailed architecture of the CNU.

The CS (see Fig. 3) is also based on a PC architecture running the LINUX OS, which connects to the ground network transponders through Ethernet (Wi-Fi and TETRA) or RS232 (UHF, VDL-4) interfaces. It performs the role of ASTERIX router between the ground network transponders and the AS. Communication network details are abstracted from the AS because ASTERIX (bi-directional) and network transponder status (uni-directional from CS to AS) are exchanged between the CS and AS over two TCP/IP connections. The Communication Medium Selector has here a similar role to that of the equivalent module in the CNU. However, while all ASTERIX messages issued by the onboard system to the ground system must be delivered to the same entity, i.e. the CS, the ASTERIX messages issued by the ground system to the onboard system may be either broadcast messages or be directed to a mobile node in particular, uniquely identified by a specific 24-bit Target Address field in the ASTERIX message. It may be thus necessary to map this Target Address code into network addresses. In the case of Wi-Fi and TETRA, the Address Resolution module performs this task. In the case of IP-based Wi-Fi and TETRA Specific Connectionless Network Service (S-CLNS), the Address Resolution module translates between Target Address codes and UDP/IP port/addresses. In the case of the TETRA Short Data Service (SDS), the Address Resolution module translates between Target Address codes and 24-bit TETRA Individual Short Subscriber Identity numbers. The address resolution table entries can be either coded statically or be learned and cached in run-time based on ASTERIX messages arriving from the wireless network. The Status Monitoring module keeps track of the status of ground network transponders, which is retrieved by ground network handlers implemented as part of the Communication Medium Selector module. The Status Monitor periodically delivers overall ground network status messages to the AS. Local transpoder status is periodically checked by the CS ground network handlers by means of IP-based PING requests (Wi-Fi and TETRA transponders) or proprietary status messages (UHF and VDL-4).

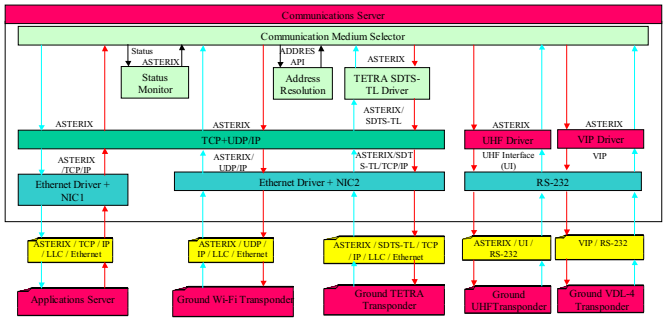

Fig. 3. Detailed architecture of the CS.

A. *The Wi-Fi Network*

The Wi-Fi network is based on the IEEE 802.11g standard [7], which operates in the 2.4 GHz frequency band, supporting physical bitrates between 1 Mbps and 54 Mbps. Its infrastructure comprises a number of Ground Wi-Fi Transponders (also designated Access Points – AP), which are connected to the CS through Ethernet. The simplified protocol architecture of the Wi-Fi network is depicted in Fig. 4. The VPN that provides access to the airport's intranet is omitted. Application data is exchanged on top of UDP/IP between the Onboard Wi-Fi Transponder and the CS. UDP was preferred to TCP due to the well-known inefficiency of TCP in the presence of transmission errors in wireless networks [8]. The wireless interface is based on the Discrete Coordination Function (DCF) defined in the IEEE 802.11 standard [5]. According to the requirements of AIRNET, each mobile should be capable of detecting other mobiles based on their own Traffic Information transmissions to the ground system. In order to avoid the problems related with operation in promiscuous mode, while simultaneously guaranteeing a low mobile-to-ground packet error probability in the presence of collisions and interference, the Traffic Information messages from mobiles to ground are transmitted twice: broadcasted to the WLAN (without ACK) and transmitted in unicast mode to the AP (and thus using the ACK mechanism defined in the IEEE 802.11 standard). Although at first sight this appears to be inefficient, AIRNET Traffic Information has low demands in terms of throughput (e.g., location updates from mobiles are

transmitted with a period of 1 second) compared with the bitrate supported by the Wi-Fi air interface (lowest bitrate is 1 Mbps). The ability of mobiles to broadcast their positions to the WLAN significantly contributes to the safety provided by the system.

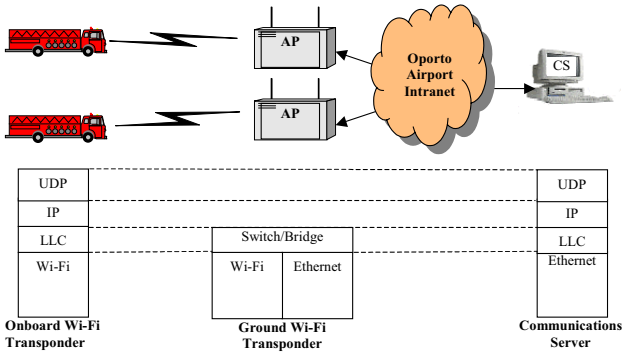

Fig. 4. Protocol architecture of the Wi-Fi network.

B. *The TETRA Network*

The TETRA network is centered on a base station (BS) already deployed at the Oporto airport to support voice services. The TETRA network can support packet data services in two ways (see Fig. 5): the Specific Connectionless Network Service (S-CLNS) and the Short Data Service (SDS).

The S-CLNS allows the transmission of IP packets between a TETRA mobile terminal and terminals located in either a fixed IP-based LAN or other mobile terminals using the S-CLNS. In AIRNET, the proprietary DIMETRA S-CLNS implementation is used [9]. The interface with the IP-based LAN is performed by a PC running the Packet Data Gateway (PDG) software. This equipment, together with the BS forms the logical Ground TETRA Transponder when the S-CLNS service is in use. UDP was again chosen as the transport protocol due to the reasons already mentioned for Wi-Fi.

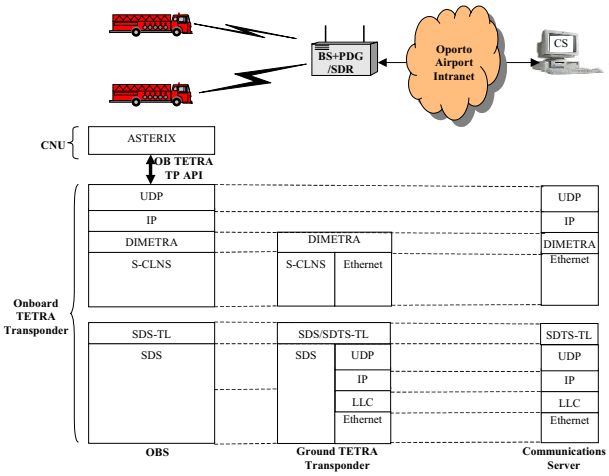

Fig. 5. Protocol architecture of the TETRA network.

Due to the low bitrate supported by the TETRA technology (maximum of 28.8 kbps per carrier per direction of communication) and the overhead introduced by UDP/IP communication, the AIRNET architecture will also support the SDS mode of operation for performance evaluation. In this case the PGD is replaced a Short Data Router (SDR) that is part of the DIMETRA SDS implementation [10].

C. *The UHF Network*

This network manages a radio channel that allows transmitting and receiving data between the vehicles and the private network ground station. The overall technical and regulation constraints on radio data transmission lead the equipment to work on a restricted radio band under specific authorization. These bands can be VHF, UHF or others. In AIRNET only UHF will be used (more specifically, the 440-470 MHz frequency band). The radio channel has a limited capability frequency excursion and uses specific modulation schemes (QPSK, FFSK, GMSK) in a fixed bandwidth. An optimum use of the scarce available bandwidth has to be ensured depending on the data refresh rate, the number and the type of vehicles. As such, end-to-end communication will rely on a proprietary protocol stack developed to take into account the limitation of UHF technology for data transmission (Fig. 6). The IP protocol family is not used due to its associated overhead.

The management of the air link by multiple users is based on the STDMA (Self-organizing Time Division Multiple Access) principle. It consists in the decomposition of the link in multiple cycles, sub-cycles and time slots. These cycles and sub-cycles define different levels of transmission rates. In that kind of protocol, a central system allocates time slots for each user of the same radio channel. The time slot allocation system is managed in real-time. Both the Onboard and Ground UHF Transponders are directly connected through RS232 interfaces to the CNU and CS respectively. Unlike TETRA, UHF allows vehicles to broadcast position information to other vehicles and to the CS.

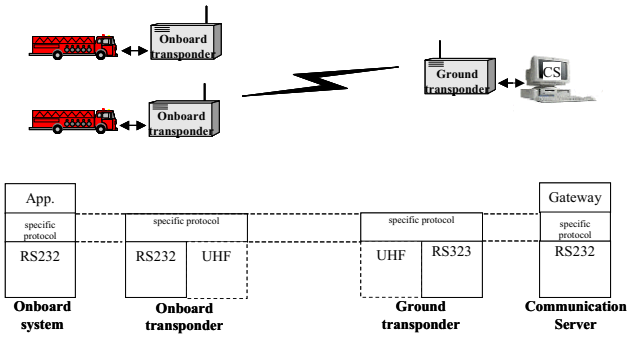

Fig. 6. Protocol architecture of the UHF network.

D. *The VDL Mode 4 (VDL-4) Network*

VDL-4 [6] is a standard VHF data link, providing digital communications between mobile stations (aircraft and airport surface vehicles) and between mobile stations and fixed ground stations. It is suitable for time-critical applications and is characterized by very high delivery probability. VDL Mode 4 transmits digital data in a standard 25 kHz VHF communication channel. VDL-4 provides long range (200 nautical miles) to the data link and very good transmission characteristics on ground at the airport. Like UHF, it is built on the STDMA concept, dividing the communication channel into a large number of time slots. The start of each slot is an

opportunity for a station to transmit.

The core function of VDL-4 is the Automatic Dependant Surveillance Broadcast (ADS-B). In addition to ADS-B, it has the capability to support other aeronautical communication and navigation services. Due to the specificity of the services supported by VDL-4, it will only be used for Traffic Information services, relying on Wi-Fi, TETRA or UHF to complement the support of other AIRNET services. The protocol stack of VDL-4 is depicted in Fig. 7. Communication between the CNU or CS and the VDL-4 Transponders is based on the VDL Mode-4 Interface Protocol (VIP) [11], which works on top of the RS232 interface.

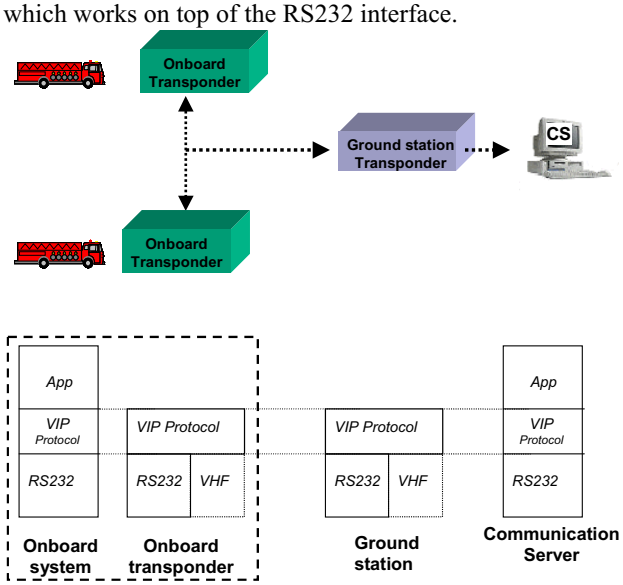

Fig. 7. Protocol architecture of the VDL-4 network.

IV. Conclusion

This paper has presented the network architecture that will support the A-SMGCS developed in IST project AIRNET. This network architecture will integrate four different wireless technologies: Wi-Fi, TETRA, UHF and VDL-4. This integration will be seamless and transparent to the A-SMGCS services and users, an objective that is achieved by the CNU and CS entities located at the onboard and ground system respectively.

The presented work was the result of the AIRNET specification phase and its development and deployment in the demonstrator has already started, which will be followed by a trial phase. It is expected that the trial will reveal the significant performance shortcomings of TETRA and UHF, rendering these technologies impractical to support all the AIRNET services. VDL-4 has the advantage of being an aeronautical network supporting a better integration between ground vehicles and grounded aircraft, through due to scope limitations it requires integration with a different wireless technology in order to support a complete A-SMGCS service framework. One of these technologies will probably be Wi-Fi, which is expected to support the AIRNET services in a scalable way, also allowing the additional support of multimedia services including voice and video. In the scope of ACI and ICAO the use of Wi-Fi in airports is being studied by different groups. AIRNET can thus provide a significant contribution to this standardisation work.

References

[1] A. Casaca, F. Presutto, I. Rebelo, G. Pestana, A. Grilo, “An Airport Network for Mobiles Surveillance”, International Conference on Computer Communications 2004 (ICCC’2004), Beijing, China, Setembro de 2004.

[2] AIRNET consortium, “AIRNET Operational Services Requirements, Project deliverable”, AIRNET/TN1.1/ANA/WP1.1/OP_REQ/1.1, 1 July 2004.

[3] Eurocontrol, “EUROCONTROL Standard Document for Surveillance Data Exchange, Part1: All Purposed Structured Eurocontrol Surveillance Information Exchange (ASTERIX)”, v 1.29, February 2002.

[4] ETS 300 392-1, “Radio Equipment and Systems (RES); Trans-European Trunked Radio (TETRA); Voice plus Data (V+D); Part 1: General Network Design”, ETSI, February 1996.

[5] IEEE 802.11, “Wireless LAN Media Access Control (MAC) and Physical Layer (PHY), Specifications”, IEEE, 1999.

[6] ICAO, “VDL Mode 4 Implementation Manual”, April 2002.

[7] IEEE 802.11g, “Wireless LAN Media Access Control (MAC) and Physical Layer (PHY), Specifications: Higher-speed Physical Layer (PHY) Extension to IEEE 802.11b”, IEEE, 2003.

[8] H. Balakrishnan, et al, "Improving TCP/IP Performance Over Wireless Network", Proc. ACM Mobicomm'95, November 1995.

[9] Motorola, “DIMETRA Packet Data Service – Programmer’s Guide”, Release 3.1, March 2000.

[10] Motorola, “DIMETRA Short Data Service – SDTS – Programmer’s Guide”, B draft 1, 13 March 2000.

[11] C.N.S Systems, “VDL Mode 4 Interface Protocol (VIP)”, CNSS-02-2498-E, June 2004.

António M. Grilo received the Information Technology Engineer degree in 1996 and the M. Sc. degree in Electronics Engineer and Computers in 1998, both from the IST, Technical University of Lisbon, Portugal. He has finished his Ph. D. course at the same institution, working in the area of Wireless Access Networks. He is currently an Assistant Professor at IST, where he teaches computer networks and telecommunications since 1998, in graduate and post-graduate courses. In 1995 he joined INESC, Lisbon, working in the area of broadband access networks and terminal equipment. From 1996 until now he has been working in several European projects, namely ACTS projects ATHOC and AROMA and IST projects MOICANE and OLYMPIC. He is currently participating in IST project AIRNET.

Romain Mathieu received in 2002 the Electronics and Computers Engineering degree from the ESEO (Ecole Supérieure d'Electronique de l'Ouest) in Angers, France. He joined M3 SYSTEMS after his graduation, where he is currently working as a R&D engineer.

Christian Axelsson has an MSc. in computers and mechanical engineering. Former employments have been on Swedish Maritime and Swedish Civil Aviation administrations working with communication and applications based upon AIS and VDL-4.

Mário S. Nunes received the Electronics Engineer degree in 1975 and the Ph. D. degree in Electronics Engineer and Computers in 1987, both from the IST, Technical University of Lisbon, Portugal. He is now Associated Professor at IST, where he teaches digital systems and telecommunications since 1975, in graduate and postgraduate courses. In 1980 he joined INESC, Lisbon, where he is now group leader, working in the area of broadband access networks and quality of service in IP networks. From 1988 until now he was responsible for the INESC and INOV participation in several European projects, namely RACE project "Technology for ATD", RACE project EXPLOIT, ACTS projects ATHOC, AROMA, MOICANE and OLYMPIC. He is author of two books, "Digital Systems" and "Integrated Services Digital Networks" and Senior Member of IEEE.